THIESEN HARDWARE SOFTWARE DESIGN GMBH

EPTA-NG

Electronic Position and Tail Light with Anti-Collision Light
with FLARM-Interface and Intelligent Synchronization - FAR 23

Mounting Instructions

Dear customer,
thank you for purchasing the EPTA-NG. This electronic position and tail light with anti-collision light and FLARM-Interface is a highly innovative product that helps to make the airspace a safer place.

The new LED technology allows an incredibly glaring red and green light with approx. only 10% of the input power consumption compared with conventional lights. The casing in high optical plastic makes the EPTA absolutely insensitive to vibrations, water, dust and other environmental influences. The efficiency of the output is manyfold higher than that of incandescent light bulbs. The heat loss of the EPTA is very low and monitored by the integrated heat controller. Nevertheless the lights need fresh airflow so installations preventing this are to avoid. In case the lights are to be mounted behind an acrylic glass panel be aware of the green house effect and ensure a sufficient airflow at all times as it is required by conventional light as well.

The EPTA-NG is part of our improved energy saving concept “Intelligent Synchronization“. This system enhances not only the detectability of the aircraft but the power management as well. Besides the EPTA-NG there are more lights featured with our “Intelligent Synchronization“ as there are EPTA-LSA, ACL3is, ERBis, ACL4, ERB2, ELL50, ELL60, ELL80.

A new developed feature for our well proven EPTA-LSA is the additional serial FLARM-Interface. With this interface (19.200 Baud, 8 Bit, No Parity, 1 Stop-Bit) a connected Power-FLARM unit can send the emergency levels 0 – 3 to the EPTA-NG and thus regulate the flash sequences of the lights. In order to avoid buzz loops connect the braid / shield of the cable only to the ground of the Power-FLARM unit.

The EPTA-NG can be operated in two modes:
1. Synchronized Mode – Only the green EPTA-NG is connected to the serial Power-FLARM-interface whereas the red EPTA-NG is connected to the yellow synchronization cable. The green cable of the left red light is left open with an insulated cable tip.
This way the red light will be synchronized by the alert level of the green EPTA-NG as well as all the others on the “Intelligent Synchronization” participating lights.
2. Asynchronous Mode – Both EPTA-NG are connected to the Power-FLARM-interface. The yellow cables are not connected and left with open but insulated wire tips. This way both lights will be driven by the Power-FLARM alert level and apart from that flash unsynchronized.

The set consists of two EPTA-NG for a NON-TSO'ed aircraft; one for each wing tip. Please follow this mounting instructions carefully.

Required materials and tools

- flexible quadruple cable for wing spans from 5 - 8 meters / 16 - 26 ft.
- 1 single shielded cable for FLARM interface
- The colour of the wing tip matching silicone
- Two non-corrosive screws 4 mm Ø x 30 - 35 mm length
- Radio solder, soldering iron with appropriate wattage
- Heat shrink tubing (enclosed)

Illustration 1

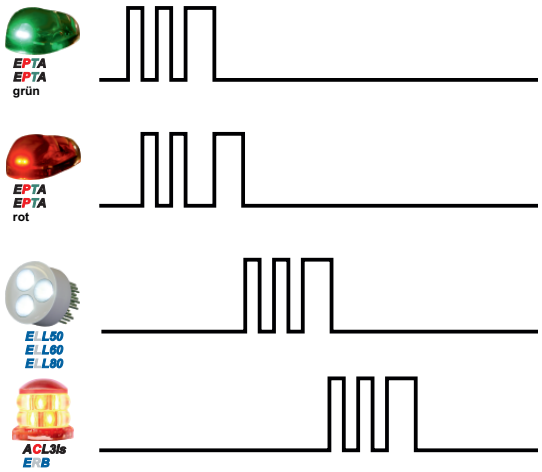

Intelligent Synchronisation = intelligent Powermanagement

Recommendations

Cables
According to the wing span we recommend a twisted quadruple cable with a cross section of 2×1.5 mm², a twisted pair cable with 2×0.5 mm² and a shielded cable for the FLARM-interface.

Adhesion
For adhesion we recommend a high quality non shrinking coloured silicone from a DIY store. Silicone provides a strong adhesion and in case of a removal only a sharp knife is required. We strongly advise against other kinds of glueing, e.g. with polyester or epoxy resin.

Screwing
Use a non corrosive ø 4 mm x 30 - 35 mm countersunk screws and a layer of silicone to fix the EPTA-NG to the wing tip. In any case we recommend the use of silicone. It seals the drill hole openings against water and dust and prevents the EPTA from twisting. For mounting on composite wings a non corrosive countersunk screw may be sufficient. Take non countersunk bolts, drive-in nuts or push nuts when mounting on the wing tips. We recommend metrical countersunk screws e.g. M4×30 – 35 mm length. Note: Make sure the EPTA-NG is mounted in flight direction and parallel to the longitudinal axis and flight attitude of the aircraft (see illustr. 2 and 3).

Mounting position, mounting
Clean the mounting positions carefully from any grease and polish with ethyl alcohol. Mark the positions of the lights on the wing tips. Drill one ø 4 mm hole for the fastening screw and one ø 7 mm for the cable feed through. When crossing sharp edges make sure the cables are well cushioned and prevented from fraying.

Illustration 2

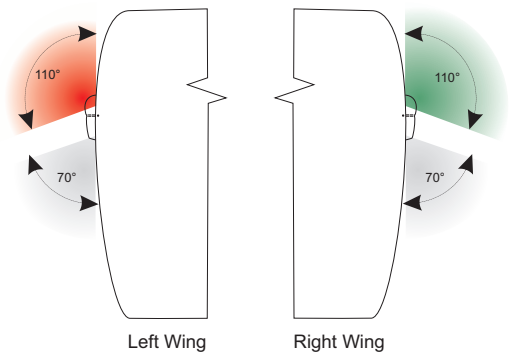

Illustration 3

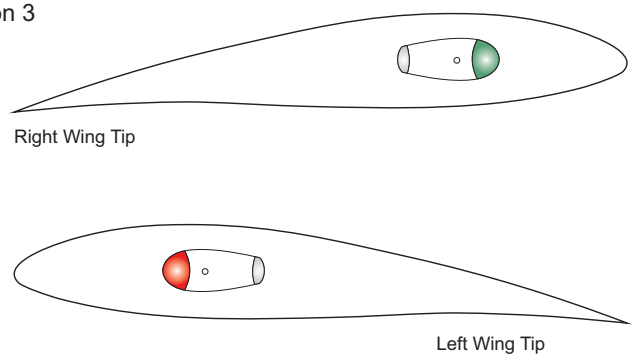

Glueing
Apply as much silicone onto the underside of the light to close a possible gap between light and wing tip, see Illustration 4. After positioning the EPTA to the required position tighten the screw carefully. Remove excess silicone and shape the gap e.g. with an in soapy water moistened finger.

Silicone needs time to cure. Best results are achieved at a temperature of 20° C / 68 ° F. Follow the handling instructions of the silicone. The final firmness (stability) is often reached only after a few days.

Illustration 4

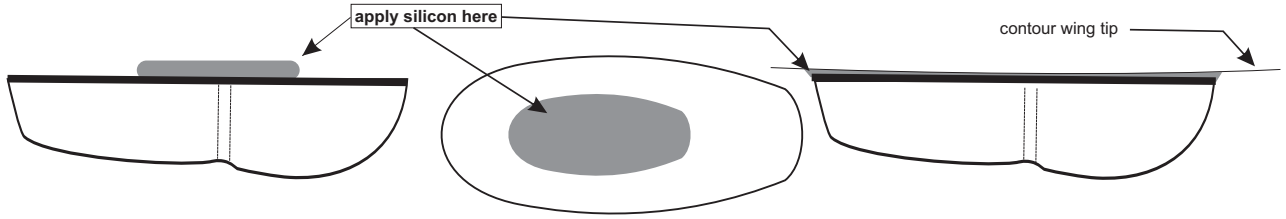

Electric power supply / cable connection to the aircraft electric system (12 Volts DC)
The best connection is to solder the cables and insulate the soldering joints with the enclosed heat shrink tubing (enclosed). Use only acid free radio solder. Never use soldering-water or solder grease. These may contain acids that cause corrosion. Mount the cables thoroughly inside the wing. Fasten all cables securely in order to prevent them from fraying esp. when crossing sharp edges. When deciding for connectors note that lustre terminals are not suitable for aircraft wiring. There is a good selection of crimp, remaining free of oxidation gold plated and other connectors available. For an easy connection the EPTA-NG is pre wired.

The colours stand for:
- Red – thick = Positive power supply for Anti Collision Light
- Red – thin = Positive power supply for Position Light
- Black = Common negative power supply
- Yellow = Intelligent Synchronization
- Green = FLARM unit

When Synchronization is not used insulate the yellow cable tip!

Additionally the EPTA-NG is provided with an internal reversible (self healing) overload protection. In case of over voltage the protector switches the EPTA-NG off. When the voltage drops or the EPTA is resetted by disconnecting from the power supply, the light is fully functional again. The overload protection will be activated by exceeding 17 V DC.

Servicing / Maintenance
If the EPTA-NG got scratches use a good car polish to refurbish the damages. Slightly deeper scratches ground with 800-1000 grit wet sandpaper at first. Never use aggressive chemicals like gasoline or solvent. For day to day cleaning take soap water. Some insect removers and detergents may cause embrittlement. Use only aircraft certified products.

If the aircraft can not be hangarized, cover the lamps in order to avoid surface ageing!

If you should have problems with the installation, questions regarding our lights, need installation tips or there are things you just want to let us know, please don't hesitate to contact us at info@thiesen.com.

Please keep in mind: Since we strive to keep our customers happy therefore are we happy to help and always grateful for a feedback.

Technical data

Operating voltage	:	10 - 17 volts (DC), typically 12.8 - 13.4 volts
Input	:	approx 20 watts
Dimensions	:	80 x 40 x 30 mms
Weight	:	approx. 76 grams with connecting cables
Warranty	:	5,000 operating hours or max. 3 years

5.000 hours or max. 3 years
assured luminous duration

Made in Germany

Wiring Diagram

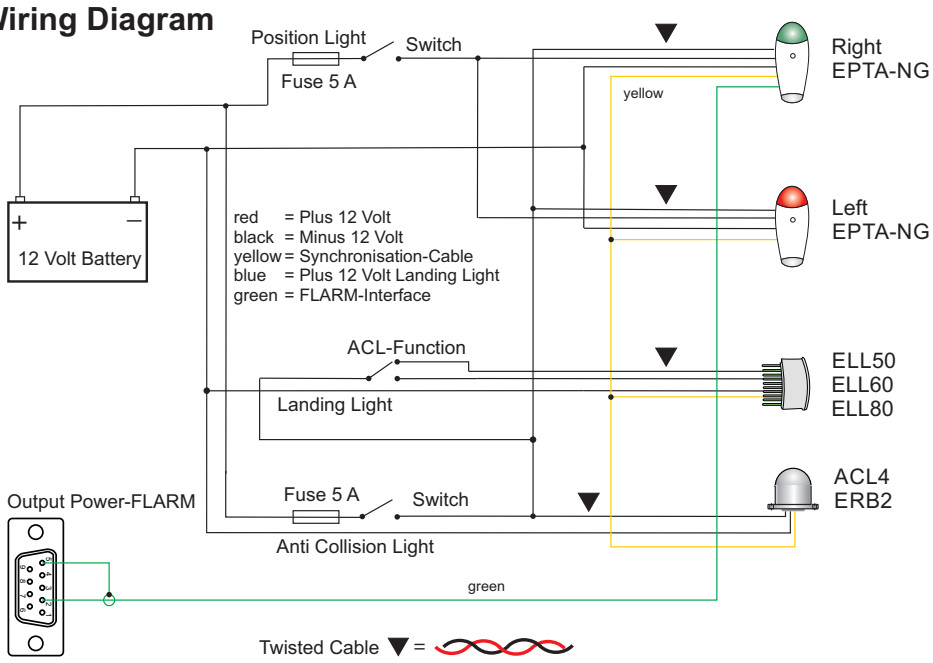

Im Tiegel 9
36367 Wartenberg
Germany
Phone: +49 (0) 66 41 - 979 - 0
eMail: info@thiesen.com
www.thiesen.com
www.flugzeuglichter.de

THIESEN
HARDWARE
SOFTWARE
DESIGN
GMBH

Subject to change without notice